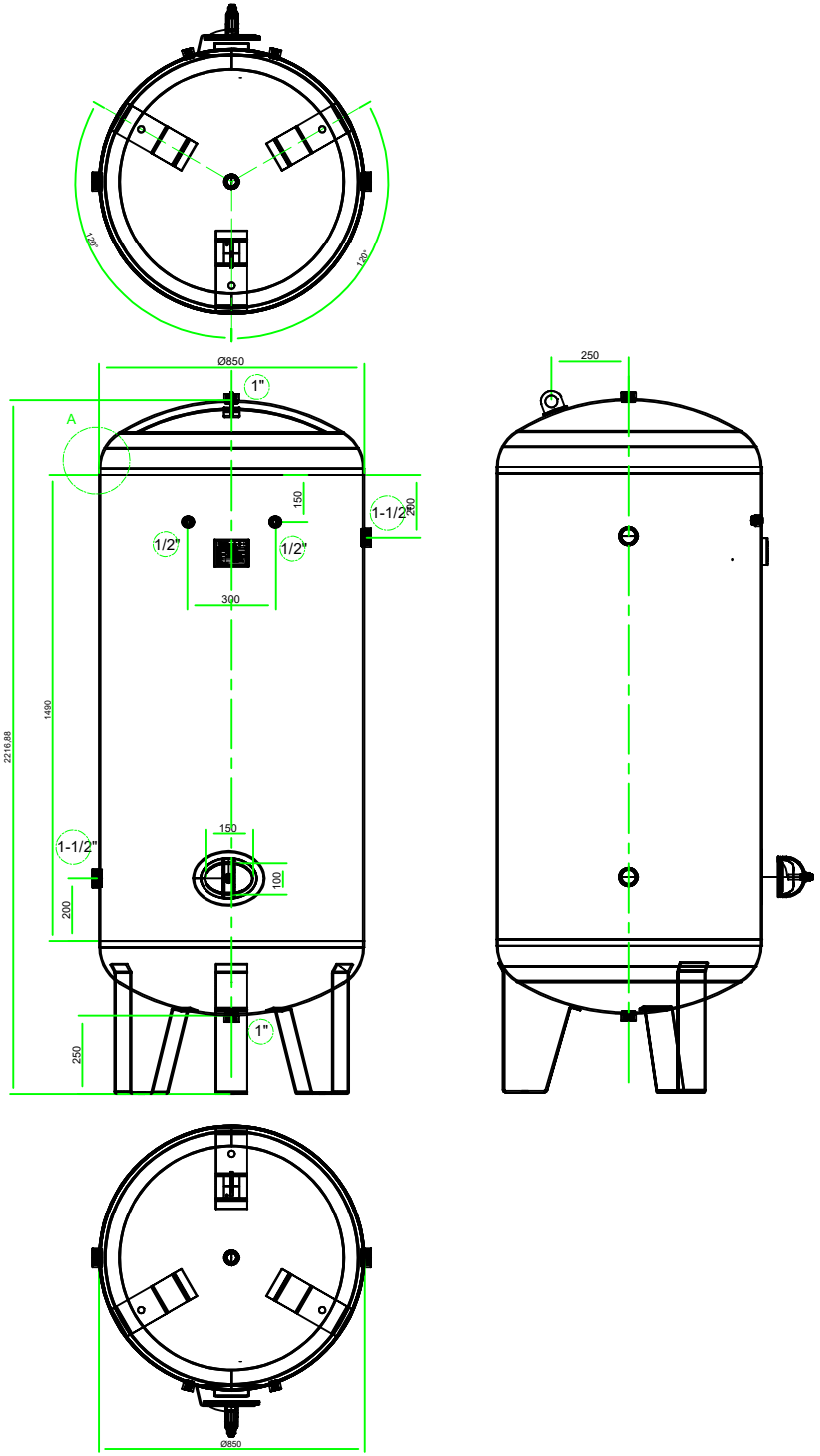

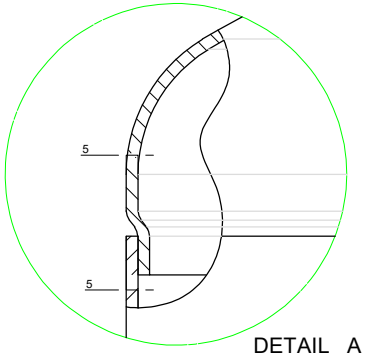

DETAIL_ A
SCALE: 2 : 3

DESIGN DATA		
DESIGN COMPATIBILITY		97/23/EC
DESIGN CODE		AD 2000/EN 13445
PROJECT CODE		GBS-DHT-11-1000
SERIAL NUMBER		
SERVICE MEDIUM		AIR
DESIGN PRESSURE		11 BAR
HYDROTEST PRESSURE		16,5 BAR
MAX.EXTERNAL PRESSURE		NO
CORROSION ALLOWANCE		0,5mm
DESIGN TEMP.		-20 ° C-100 ° C
JOINT EFFICIENCY		0,85
LETHAL SUBSTANCE		NO
SEISMIC LOADING		NO
WIND LOADING		NO
INSULATION		NO
VOLUME		1.000 LT
CODE STAMPING		NO
WEIGHT	EMPTY	230 Kg
	FULL OF WATER	1.230 Kg

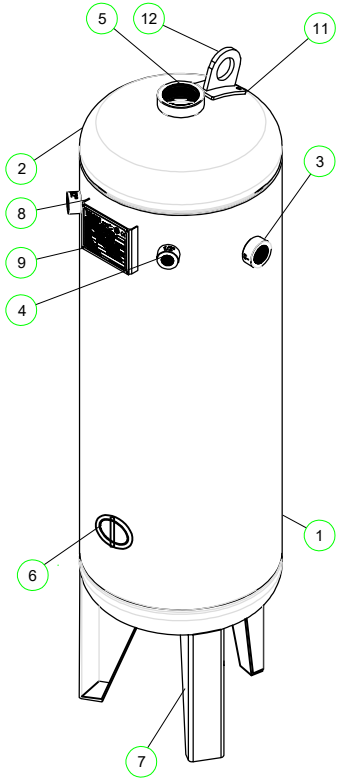

NO.	DESCRIPTION	DIMENSIONS	MATERIAL	STANDART	PART NO	QU.
12	LIFTING LUG	8mm	ST37	EN-10028-2	GBS-DHT-11-1000-011	1
11	REINFORCEMENT PAD	5mm	ST37	EN-10028-2	GBS-DHT-11-1000-010	1
10						
9	NAME PLATE		ALUMINUM	EN-10028-2		1
8	NAME PLATE PAD	2mm	ST37	EN-10028-2	GBS-DHT-11-1000-008	1
7	LEG	4mm	ST37	EN-10028-2	GBS-DHT-11-1000-007	3
6	MENHOLE		ST37	EN-10028-2	GBS-DHT-11-1000-006	1
5	NOZZLE	1" SPECIAL	P235GH	EN-10028-2	GBS-DHT-11-1000-014	2
4	NOZZLE	1/2" SPECIAL	P235GH	EN-10028-2	GBS-DHT-11-1000-013	2
3	NOZZLE	1-1/2" SPECIAL	P235GH	EN-10028-2	GBS-DHT-11-1000-012	2
2	ELLIPSOIDAL HEAD	Ø850x5 ELLIPSOIDAL	P265GH	EN-10028-2	GBS-DHT-11-1000-002	2
1	CYLINDIRICAL SHELL	Ø850x1490x5	P265GH	EN-10028-2	GBS-DHT-11-1000-001	1

REVISION

TOLERANCES

SURFACE TREATMENT SYMBOLS	MAX. SURFACE SMOOTHLESS Ra(Rz) UM			
	R1	R2	R3	R4
NOTE	FREE			
	160	100	63	25
	40	25	16	10
	16	6,3	4	2,5
	1	1	1	0,4

DEGREE TOLERANCE

TOLERANCE CLASS	LIMIT DIMENSIONS FOR NOMINAL SIZE AREAS - SHORT ANGLE SIDES				
	<10°	10 - 50	50 - 120	120 - 400	>400
MORE COARSE	± 3°	± 2°	± 1 °	± 0,30 °	± 0,20 °

DISTANCE DIAMETER TOLERANCE

TOLERANCE CLASS	LIMIT DIMENSIONS FOR NOMINAL SIZE AREAS							
	0-3	3-6	6-30	30-120	120-400	400-1000	1000-2000	2000-4000
COARSE	-	± 0,5	± 1	± 1,5	± 2,5	± 4	± 6	± 8

TOLERANCE : DIN ISO 2768 T1(6,91)

	NAME	SIGNATURE	DATE
DESIGN	SENA ERSOY		18.12.2017
CONTROL	MERT YORGANCI		18.12.2017
APRROVAL	MİTHAT YORULMAZ		18.12.2017

"ALL DIMENSIONS MILLIMETERS."

GBS-DHT-11-1000

A2

GBS

SCALE:1/5 | COLOUR: | QUA:

THIS COPYRIGT OF THIS FILE IS RESERVED BY GÜVEN BOMBE VE BASINÇLI KAPLAR A.Ş.

NOT: DO NOT MEASUREMENT FROM DRAWING