PISTOL DIE GRINDER

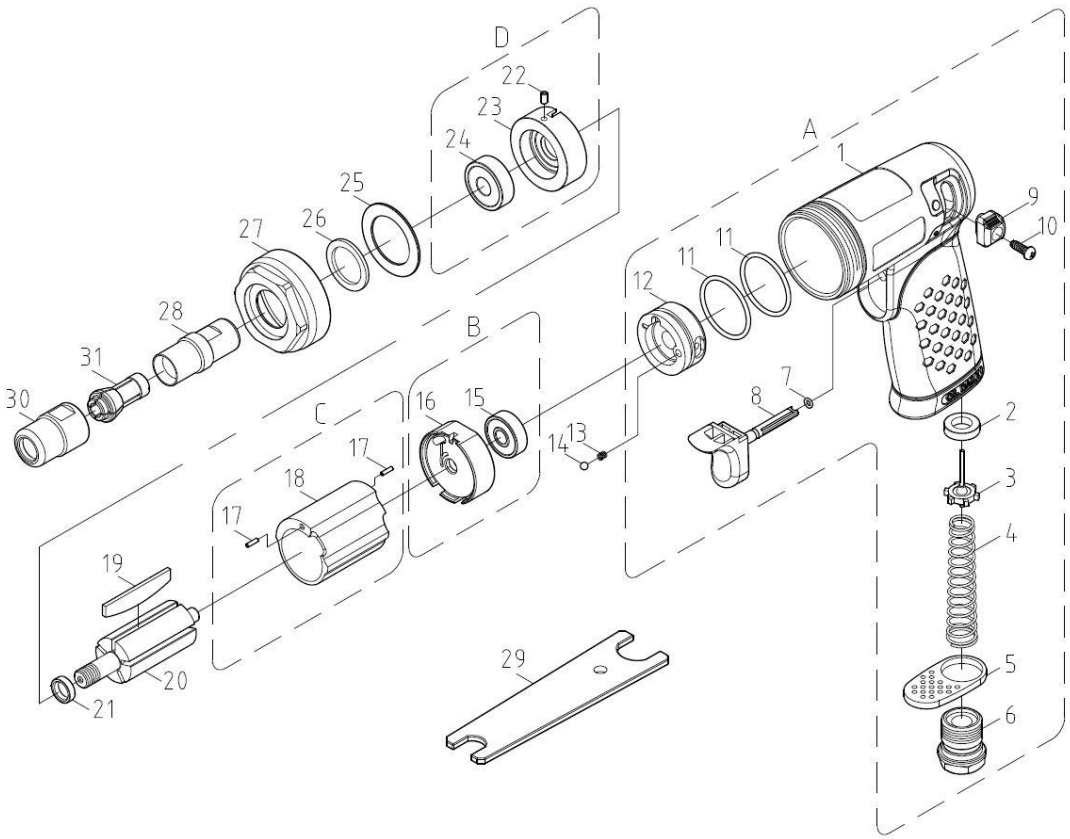

PART LIST

NO.	CODE NO.	PARTS NAI (ENG)	Q'TY
1	2-001106001	Housing	1
2	2-927010	Oil Seal	1
3	2-010105801	Pin Valve Rod	1
4	2-002105802	Cone Spring	1
5	2-004105801	Exhaust Deflect	1
6	2-005105801-03	Air Inlet	1
	2-005105801-04	Air Inlet	
7	2-916002510	O-Ring	1
8	2-030105801	Trigger	1
9	2-031105801	Reverse Lever	1
10	2-9263510-02	Screw	1
11	2-916025118	O-Ring	2
12	2-068106001	Rear Plate Space	1
13	2-007101002	Spring	1
14	2-9180318	Steel Ball	1
15	2-902626-02	Ball Bearing	1
16	2-011106001	Rear Plate	1
17	2-9281506	Spring Pin	2
18	2-012103302	Cylinder	1
19	2-014106001	Blade	5
20	2-013106001	Rotor	1
21	2-016106001	Washer	1
22	2-9282505	Spring Pin	1
23	2-015106001	Front Plate	1
24	2-902608-02	Ball Bearing	1

NO.	CODE NO.	PARTS NAME (ENG	Q'TY
25	2-016105901	Washer	1
26	2-060106001	Felt	1
27	2-027106001	Front Casing	1
28	2-065109001	Inner Ring	1
29	3-576101601	Wrench	2
30	2-035109002	Lock Nut	1
31	2-066109002	Chuck	1
	2-066109002-02	Chuck	
	2-066109002-03	Chuck	
	2-066109002-04	Chuck	

Consumable parts No. 2, 3, 7, 11, 13, 14, 19

HAD-1090 DEC. 2023